B-1240 February 2014

HARD-SIDED HIGH TUNNEL CONSTRUCTION

http://tinyurl.com/htconstruction

http://tinyurl.com/HThandles

University of Wyoming Extension

Hard-Sided High Tunnel Construction

Authors:

Jeff Edwards, Extension Educator, University of Wyoming Extension

Del Jimenez, Extension Agricultural Specialist, New Mexico State University

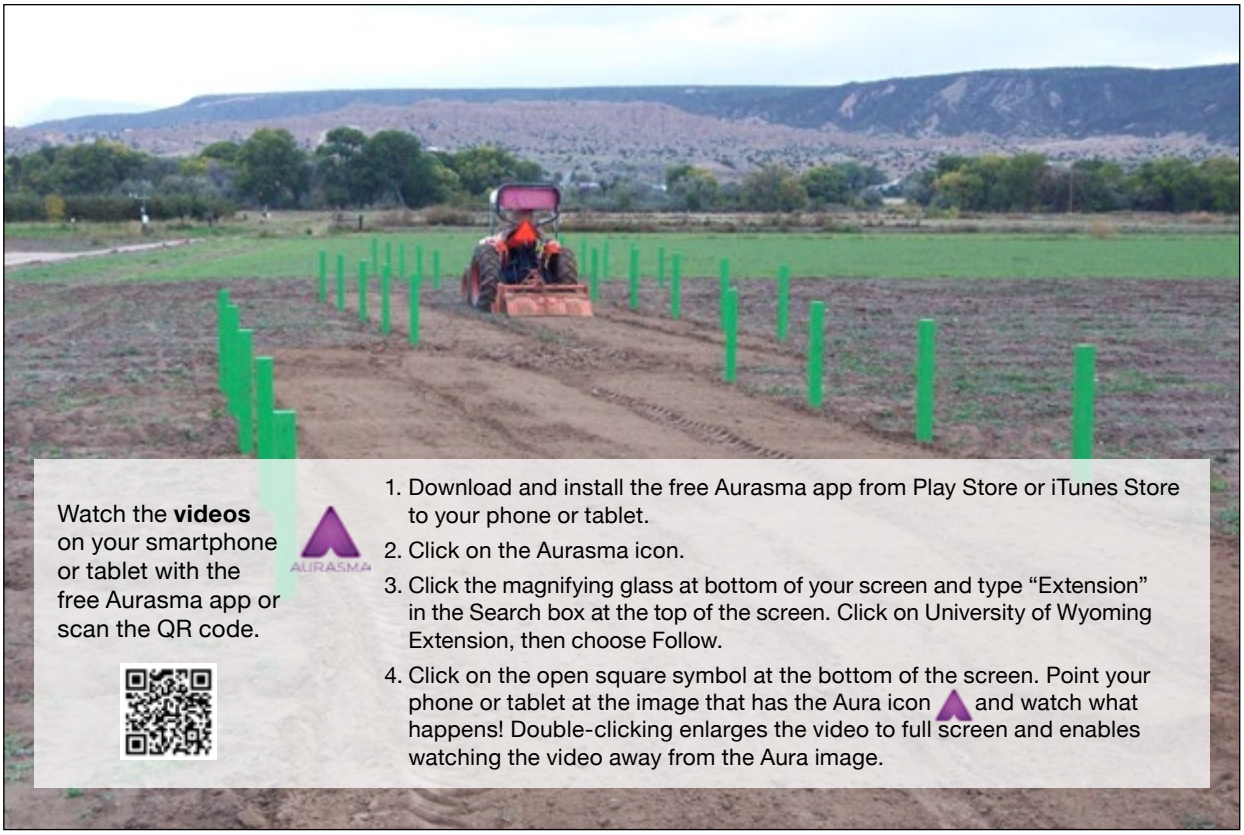

Senior Editor: Steven L. Miller, College of Agriculture and Natural Resources, Office of Communications and Technology

Graphic Designer: Bernadette van der Vliet, College of Agriculture and Natural Resources, Office of Communications and Technology

Contents

Factors to Consider Before Building a High Tunnel 4
Building Site Selection 5
Project Preparation 5
I. MATERIAL PREPARATION 6
a. Lath Material 6
b. Painting the Lumber 6
c. Preparation of the 4-inch X 4-inch Posts 6
d. PVC Rib Assembly 6
II. HIGH TUNNEL CONSTRUCTION – Base 8
a. Squaring the structure 8
b. Establishing the perimeter 8
c. Setting the Corner Posts 8
d. Setting the Remaining Posts 9
e. Attaching the Top Rail 10
III. HIGH TUNNEL CONSTRUCTION – Ribs 11
a. PVC Rib Assembly and Placement 11
b. Lifting the Rib Assemblies into Place 11
c. PVC Rib Attachment to the Base 12
d. Placement of the "Key Rib" 14
e. Final Rib Assembly-placement 14
IV. HIGH TUNNEL CONSTRUCTION – Framing 16
a. Base Plate or Kick Plate 16
b. End-wall Framing 16
i. Door Frame 17
c. Complete the End Wall Framing 19
d. Attaching the Purlins 20
Door Construction 23
Poly Skin Attachment to the Wooden Base 24
Installation of the Poly Skin Cover 24
Literature Cited 28
Appendix 29
I. Suggested Tools List 29
II. Materials List for Hard-Sided High Tunnel (HSHT) 30
III. Suppliers 31
Putting it all together: The 3 Minute High Tunnel Build. Watch the video and see how it is done! 32

Producers have considered methods for protecting crops from environmental extremes for many years (Ashton, 1994). The advent of durable greenhouse-quality plastic films has allowed for experimentation in designs of high tunnels or hoop houses, structures that provide plant protection, and the capacity to extend the growing season without additional energy inputs for heating and cooling purposes. These qualities make a high tunnel an economical method to moderate challenging environmental conditions. Recently, high tunnel use and utility have become increasingly popular in locations such as Wyoming as a method to protect tender plants from unpredictable early and late seasonal variability, and allowing producers to extend the growing season for the production of a wide variety of specialty crops (Bachmann, 2005).

The original Hard-Sided High Tunnel (HSHT) design was developed by Del Jimenez, extension agricultural specialist, New Mexico State University. Although pre-engineered kits are available from a variety of suppliers, Jimenez's design is one of thrift, utilizing locally available materials where possible, and constructing a structure that can withstand a wide variety of environmental conditions (Jimenez, et. al., 2005). High tunnels are easy to build and adaptable to meet the needs of producers. This document describes the construction methods required to build a modified 16-ft X 32-ft HSHT (Figure 1). This structure can be completed in approximately 20 hours with a minimum crew of four. The materials list can be adjusted to fit individual needs if you choose to change the project dimensions.

Factors to Consider Before Building a High Tunnel

High tunnels can be relatively inexpensive to construct, ($2-3 per square foot or approximately $1,600 for the materials used for construction of the design in this publication).This amount is for materials only and does not include other items such as labor, tool rental, etc. These structures are considered temporary and maintenance once constructed is minimal; however the "skin" and other materials do have a limited life expectancy. Depending on the skin material, quality of building materials selected, and environmental conditions, and the quality of the original construction, the structure should survive approximately five to six years. The structure should be evaluated periodically and repairs made if required. Other considerations prior to final design selection are wind and snow issues specific to a location. Lower, flatter structures perform best in windy conditions while taller structures will more likely shed snow. Like any building, there are load limitations of these structures and understand that one may need to remove snow or add internal bracing to prevent collapse.

Building Site Selection

Select a site that is moderately level with good drainage and good soil for planting. A site can be modified using soil fill so construction is on a level pad. Select a site in an open area where trees and other obstacles will not affect sunlight penetration. Consider the surrounding area so the structure will be protected against high winds and heavy snows, thus extending the high tunnel life. Water is required and electricity may be needed, so nearby sources should be considered. Security and protection against vandalism of the high tunnel and crop may also be a factor to consider when selecting a site (Jimenez et al., 2005; Walker et al., 2012).

Considerations for High Tunnel Orientation

The single determining factor for setting the orientation of a high tunnel in Wyoming is the direction of the prevailing wind. In many locations, these structures are used to produce crops throughout the winter and shut down during the hot summer months; this is not possible in Wyoming. These structures in Wyoming are considered season extenders and are conducive to year-round production only if supplemental heating is utilized. The ability to vent excessive heat during midsummer is critical to plant production strategies. Incorporating roll-up sides with one side oriented toward the prevailing wind will allow venting excessive heat throughout the growing season.

Project Preparation

Independent of the type of building material chosen (raw lumber, redwood, cedar, pressure-treated, or bio composite plastic products), there is a certain amount of material preparation that must be completed to construct the high tunnel in this publication. For the purpose of discussion, this project will be using raw lumber. A complete listing of materials required for this structure in Appendix II.

NOTE: When using power tools please read and follow the manufacturer's instructions for use and wear recommended safety equipment.

Figure 1. Completed 16' X 32' Hard-sided high tunnel.

I. MATERIAL PREPARATION

a. Lath Material

Approximately 550 linear feet of lath is required for this size of project. The lath is used as furring strips to hold the poly skin material in place. Taking a 1/8-inch kerf of the table saw blade into account, approximately 70 linear feet (seven 3/8-inch lath strips) can be yielded from each 10-foot X 2-inch X 4-inch board. For this project, rip seven (7) of the 10-ft X 2-inch X 4-inch boards into 3/8-inch lath strips and set aside for painting (Figure 2). Once the paint has dried, use a 3/32-inch drill bit to pre-drill **all** lath material through the center of the 1½-inch face side. Drill the first holes approximately 1 inch from the ends and continue drilling holes on approximately 12-inch centers for the length of the lath material. To save time, several lath strips can be stacked and drilled simultaneously.

http://tinyurl.com/HTfirringstrips

Figure 2. Ripping lath material.

b. Painting the Lumber

Paint all wood surfaces for this project, including the lath strips, using an exterior latex paint. One coat is sufficient, but two coats are better. Allow enough time for the paint to dry prior to handling. After the paint has dried, organize and group the lumber by type and size. Organizing the materials will allow more efficient construction.

c. Preparation of the 4-inch X 4-inch Posts

Once the paint has dried, cut two (2) of the 10-ft X 4-inch X 4-inch posts in half (each will be cut into two (2) 5-foot X 4-inch X 4-inch sections) and lay aside. These will be used as the corner posts; the remaining posts will be cut to fit.

d. PVC Rib Assembly

The rib assembly consists of 2-inch Schedule 40 PVC pipe ***ribs*** and ***spacers*** that must be cut to size ahead of time. Since the PVC **ribs** are on 4-foot centers, a 32-foot long structure requires nine (9), 20-foot sections of PVC pipe for the ribs (Figure 3). If the sections of PVC pipe have bell joint ends, cut off the bells (in front of the bell flair) as they are not used in this project. Measure the usable length of pipe and be certain all rib pieces are cut the same maximum length (after cutting off the bell end the overall length may be less than 20 feet; however, all ribs must be cut to the same length). From four of the remaining 2-inch PVC pipe, cut sixteen (16) - 45 ½-inch **spacers**.

Complete all PVC cement work on a hard flat surface. Use PVC pipe cleaner and cement to begin building a total of four PVC rib rectangles (Figure 4). Be certain to align all joints while gluing so they are straight. The first two rectangles each consist of two spacers, two ribs, and four 2-inch PVC T's (note: do not use low-pressure drain fittings, as there is limited surface to cement together). Experience in the construction has proven that gluing the "T's" and/or 90° elbows to the "spacer" first and then to the ribs makes the assembly process easier (Figure 3). Align the "T's" so the

top of the "T" can receive the spacers and the bottom of the "T" can receive the ribs (Figure 4). Next, in the same manner, build two additional rectangles each consisting of two (2) spacers, two (2) ribs, and two (2) 2-inch PVC T's and two (2) 2-inch PVC 90° elbows. The rectangles with the 90° elbows are for either end of the structure. Finally, orienting the "T's" as described above, clean and cement a 2-inch "T" to both ends of the single remaining rib. This single rib is considered the "key" rib when erecting the ribs onto the wooden base. The "key" will allow adjustment of the final spacer length, which permits the end rib rectangle assembly to fit flush with the outside edge of the wooden base. Set these rib rectangles and the key rib aside and allow PVC cement to cure according to the cement manufacturer's instructions (Note: Do not glue additional spacers and connect the individual rectangles as more than two ribs together create complications while attaching the ribs to the wooden base).

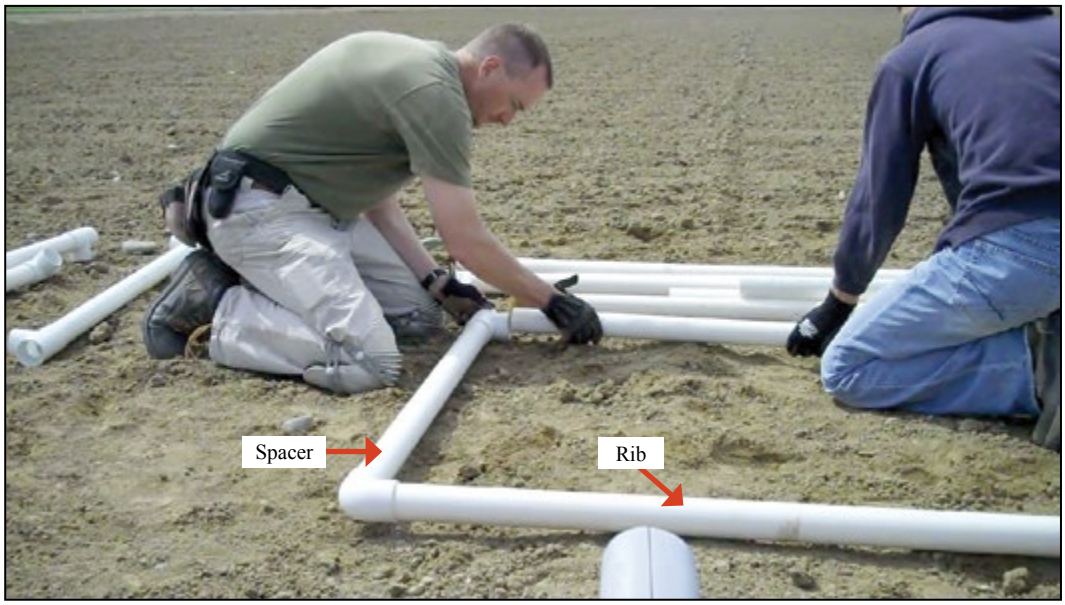

Figure 3. Spacer assembly first and adding the ribs.

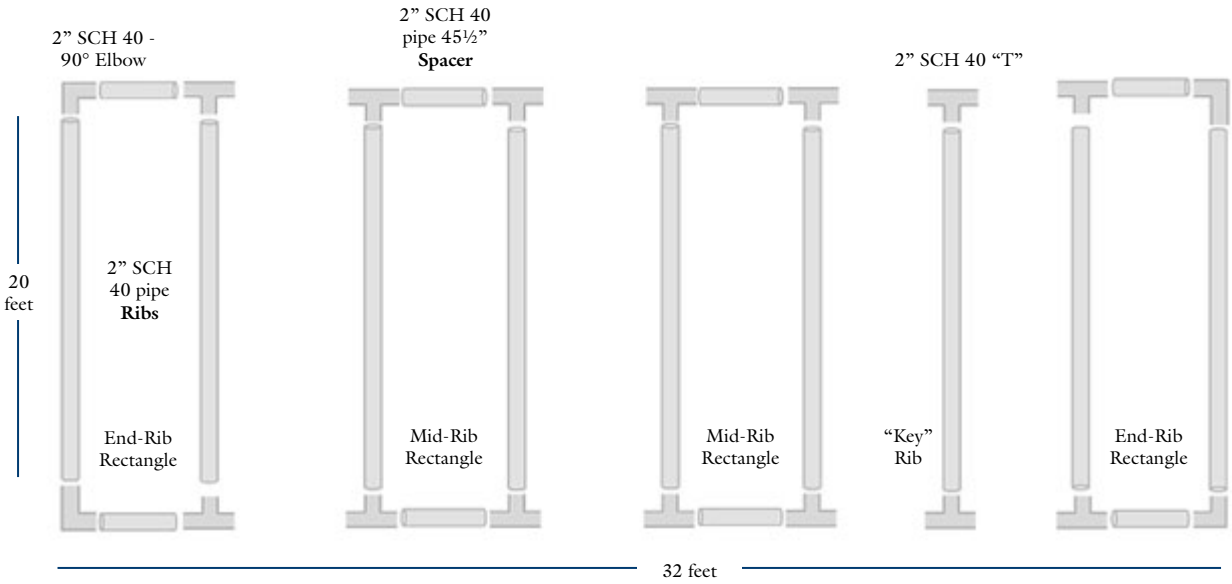

Figure 4. Schematic of 16-ft x 32-ft high tunnel rib assembly. Additional spacers between the rib assemblies will be added when the ribs are attached to the wooden base.

II. HIGH TUNNEL CONSTRUCTION – Base

a. Squaring the structure

Prep site as needed and establish the structure perimeter. Square the perimeter of the high tunnel by using the Pythagorean Theorem (Anonymous, 1999) (Figure 5).

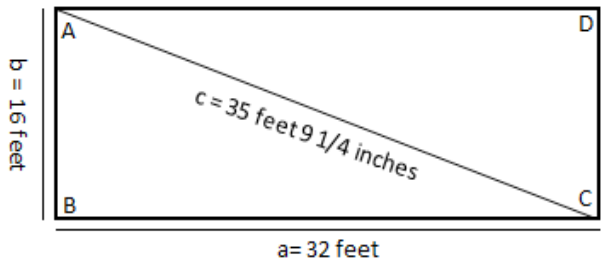

Figure 5. Perimeter points used to establish a square structure.

$a^2 + b^2 = c^2$

Where: (a = Length of Building)^2 + (b = Width of Building)^2= (c = Hypotenuse of Building)^2

Example: a (32-ft)^2 + b (16-ft)^2 = c^2

1,024-ft + 256-ft = 1,280 ft.

√1,280-ft. = 35.77 ft.

c= 35.77-ft. = 35 ft. 9 ¼ in.

b. Establishing the perimeter

Place a marker in corner A. Using a tape measure (greater in length than the length of the structure), measure from corner A 16 feet and locate corner B. Place a second marker to indicate corner B. Place a second tape measure on corner B. Simultaneously, measure from corner A, 35 feet 9 ¼ inches and from corner B, 32 feet. Corner C is where these two measurements intersect. Place a marker at this intersection indicating corner C. To locate corner D, place a tape measure on corner C and another on corner A. Simultaneously measure 16 feet from corner C and 32 feet from corner A and place a marker at their point of intersection (Figure 6). To check your measurements, run a diagonal measurement from corner B to corner D (the measurement should be 35-feet 9-¼ inches).

Figure 6. Checking the diagonal measurement of the structure.

http://tinyurl.com/HTmeasure

c. Setting the Corner Posts

Dig a 2-foot deep hole 6 to 8 inches in diameter at each of the four corners. **Note: Set the lowest corner first if the building site is not level.** To set the first corner post, place one of the 5-foot 4-inch x 4-inch posts painted end down, attach a post level near the top, hold the post level

in both vertical directions, and align the face of the post with what you perceive as in-line with the rest of the structure. Slowly return soil back into the posthole (additional gravel and fines or a bag of dry cement may be required to hold the post firm - this will prevent the posts and top rail from bowing out when setting the ribs). Use a tamping bar to assist in setting the post. Also, when backfilling and tamping, lightly jiggle the post to force the fine material closer to the post. The gravel and fine material worked in this manner will assist in creating a tighter hold of the post. The post should have limited lateral movement under light force when completely backfilled and tamped in place. Once in place, remove the post level and attach the level to a second post.

Drop the second post in either adjacent corner to the first post hole. Whichever direction, be certain the post measurements from outside to outside do not exceed either 16 or 32 feet (or other specific outside dimensions that fit your project). Run a taut string line with a line level from the top of the first post to the top of the second post. While checking the line level, adjust the post either up or down so the level line just touches the top of the second post. Level the post vertically and align the post face with the structure. Backfill, jiggle, and tamp the post into place; continue to check the post for plumbness until the entire hole is backfilled (Figure 7). Remove the post level and attach to the third corner post.

Figure 7. Establishing the Corner Posts.

Repeat above procedure for the two remaining corner posts. Check level by running the line level from opposite corners. Outside post faces should not exceed the outside dimensions of the structure.

d. Setting the Remaining Posts

The remaining internal posts are on 8-foot centers down either side of the structure. To mark these post locations, unreel and lay a tape measure along the length of either side (From points A to D or B to C - Figure 8). Hold the tape measure taut and mark every 8 feet from the first corner to the next (there will be three markers at 8, 16, and 24 feet). Repeat this measurement and mark the same distances along the second side (post placement will be more consistent if measurements start from the same end). Dig 6- to 8-inch diameter postholes 2 feet deep at each of these locations (a total of six post holes). Attach a taut string line from the top middle of post A to the top of post D and another along the inside or outside face between post A and post D. The top line will assist with vertical leveling and the face line will assist in post orientation to the rest of the structure. Pick one of the postholes,

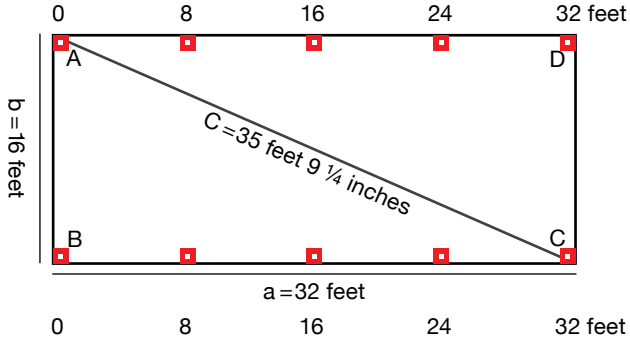

Figure 8. Post placement indicated by red squares.

measure the distance from the hole bottom to the top string line, and cut the 4-inch X 4-inch post to length, drop the post painted end down into the post hole, attach post level, adjust vertical height so the post is just touching the top string line, align face of post to side string, check level while backfilling hole, jiggle tamp into place, and repeat until all posts are in place. At this point, the structure should resemble Figure 9.

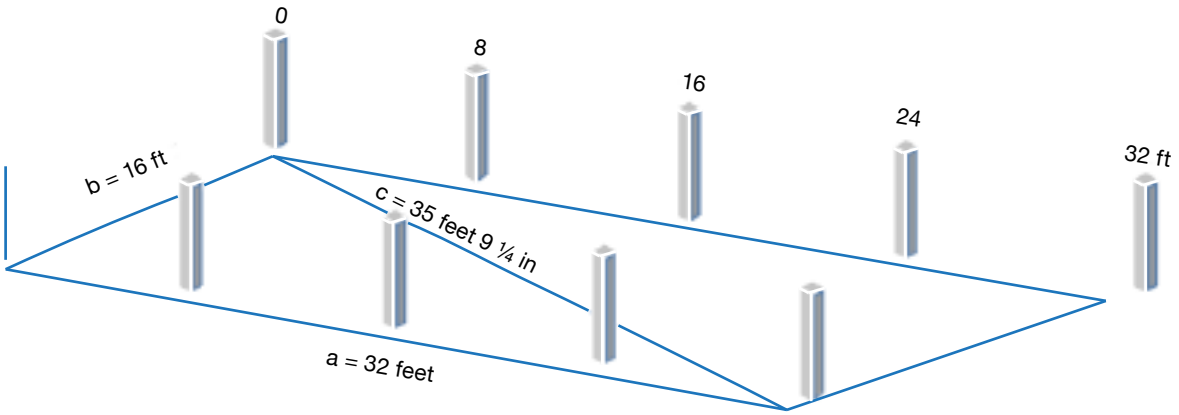

Figure 9. Rendering of structure once all posts are set.

e. Attaching the Top Rail

The PVC ribs are attached to and supported by a top rail. The top rail consists of two (2) 2-inch X 4-inch X 16-foot lumber boards per side butted together and cut to fit. Aligned the top rails over the top of the previously set posts. The 2-inch X 4-inch rails are attached to the posts using 3-inch deck screws screwed through the top of the 2-inch X 4-inch into the 4-inch X 4-inch post. Temporary side rails are required to assist in the placement of the PVC ribs. Side rails (2-inch X 4-inch X 16-ft or other dimension) are turned 90 degrees to the top rails and attached to the entire length on the outside of the top rails using 3-inch screws (Figure 10). Place the 3-inch screws 18 to 24 inches apart that so they hold the temporary side rails in place. The side rails will be removed once the PVC ribs are attached.

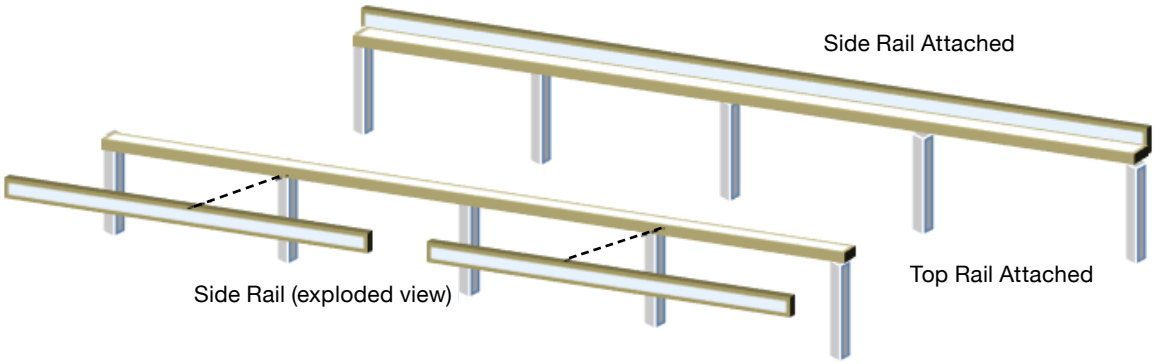

Figure 10. Top rail assembly, including temporary guide rail attachment.

III. HIGH TUNNEL CONSTRUCTION – Ribs

a. PVC Rib Assembly and Placement

Begin by placing the *individual* PVC rib assemblies (four assemblies plus the "key rib") on the top rails of the base structure in the same order as shown in Figure 2. Select one side of the top rail as the "wedge side"; slip the spacer ends of the rib assemblies into one corner of the "L" created on the top rail/temporary side rail configuration of the designated wedge side (Figures 11 and 12).

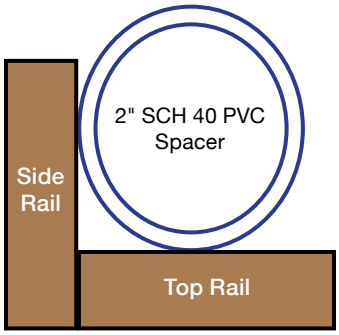

Figure 11. Cross section of Rail assembly with 2" SCH 40 Pipe "spacer" in place.

Figure 12. Rib assembly placement prior to attachment to top rail.

http://tinyurl.com/HTassembly

The rib assembly will rest on top of the opposite side rail and approximately 4 feet will hang over the outside of the opposite side rail. Add a piece of scrap lumber vertically to the outside edge base to keep the end rib assemblies flush with the exterior of the structure (Figure 13).

Using a piece of cord or rope, tie the spacer end of the first rib assembly onto the wedge side of the rail structure; this will assist in keeping the rib assembly in place while preparing for permanent attachment. It is also important to assign an individual the responsibility of holding this end of the rib assembly.

Figure 13. Temporary plate on end of structure to keep first rib assembly flush.

b. Lifting the Rib Assemblies into Place

The rib rectangle assemblies are put into place on the top rails with one person designated as the "holder" on the tied down "wedge side", one or two people in the middle pushing up on the ribs, and two people on the opposite side pushing the rib assembly in toward the base structure in one swift and clean motion. With some force, place the spacer side being pushed into the structure (creating the arc with the ribs) into the opposite side rail assembly and hold (or tie) in place

Figure 14. Method used to position rib assembly onto wooden base.

(***Warning: you have just created a giant spring with tendencies to force itself outward…do not let go of either side of the rib assembly that is resting on the top rail until the PVC rib assembly is permanently attached to the wooden base***) (Figure 14).

c. PVC Rib Attachment to the Base

Without letting the rib assembly jump out of the top rail, pull the rib assembly in slightly from the temporary top rail and place a 3/8-inch spacer (a piece of the lath material can be used) between the "T" and/or 90° PVC joints **and** the temporary side rail – repeat on the opposite side top rail. This spacer pushes the joints in from the outer edge of the structure base and allows the poly skin material to lay flat on the structure.

Using a ¼-inch drill bit that is at least 6 inches long, drill one ¼ -inch hole through the PVC pipe spacer and through the wooden top rail 6- to 8-inches inside both the "T" and/or 90° joint (Figure 15). Place a washer onto a 5-inch long ¼-inch diameter carriage bolt, drive the carriage bolt with washer through the previously drilled hole, place a washer and nut on the threads, and

Figure 15. Attachment of Rib assembly to wooden base. Drilling hole for carriage bolt; note 3/8" lath spacer at joint and holding the rib in place with rope.

Figure 16. Spacer cleaned/primed and cemented into "T" joint of the first rib assembly.

tighten until firm. **Do not** tighten to the point of crushing the PVC as this will weaken and potentially crack the PVC. Repeat carriage bolt assembly for each of the holes drilled. There will be four carriage bolts placed per each rib assembly (two carriage bolts on either side of the structure per rib assembly). Once all carriage bolts are tightened in place for the individual rib assembly, untie the rope and move to the next rib assembly to be pushed into place.

Prior to lifting and permanent attachment of the next rib assembly, glue in place a rib spacer into the receiving "T" on either side of the rib assembly attached to the wooden base. Clean and cement a previously cut rib spacer into the "T" of the rib assembly that is bolted to the top rail (Figure 16).

Repeat the steps outlined above in **Section III. b. Lifting the Rib Assemblies into Place** for the next rib assembly. Then clean and apply cement to the other end of the spacer and the receiving end of the "T" joint on the rib assembly not yet attached. Slide the rib assembly onto the glued spacer (while holding the unattached rib assembly on the top rail). Place 3/8-inch spacers between the rib assembly "T's" and the temporary side rail, and repeat the drilling and carriage bolt placement process of attachment of the rib assembly on both sides of the structure. Also, drill and place carriage bolts through the spacer between the rib assemblies.

Continue gluing spacers, lifting the rib assemblies and attaching the rib assemblies and spacers to the wooden base in this manner until you are ready for the "key rib."

Figure 17. Key Rib prior to installation and attachment to top rail.

d. Placement of the "Key Rib"

The key rib (Figure 17) is added to the structure in a similar manner as the other rib assemblies: Tie one end to the temporary side rail and hold in place, one person will push up on the center of the rib as one to two others push the rib in toward the opposing side rail; apply PVC cement to the inside of the "T" and the outside of the adjacent spacer and slide the rib "T" onto the spacer; place a 3/8-inch spacer between the "T" and the temporary side rail; drill and bolt the PVC spacer in place on the side rail (repeat the attachment procedure to the opposite side).

e. Final Rib Assembly-placement

For the poly skin material to fit properly, the final rib assembly must be flush with the outside face of the end of the structure (similar to the opposite end as described in Figure 13). Rest one side of the rib assembly in the tray formed by the temporary side rail/top rail. Temporarily attach a board onto the face of the end 4-inch X 4-inch post and push the rib assembly so the 90-degree PVC elbow is touching this board. Measure the distance from the raised bench (the raised bench on the inside of the joint is the maximum depth that the joining piece [PVC spacer] will seat into the pipe fitting) on the inside of the "T" of the key rib, to the raised bench on the inside of the "T" of the outside rib assembly (Figure 18). Cut one of the last two remaining 45 ½-inch PVC spacers to match this measurement. Prime/clean and cement this spacer into the "T" of the key

rib. Because of various factors in the construction process, it is highly likely this measurement is not the same on the opposite side. For the measurement on the opposite side of the structure, lift the final rib assembly from the top rail and slide the entire rib assembly so that the other end of the final rib assembly rests in the top rail/side rail of the opposite side, line up the 90 degree PVC elbow with the outside edge face, measure the distance from the raised bench on the inside of the key rib to the raised bench on the inside of the "T" of the last rib assembly, cut the final 45 ½-inch spacer to match this measurement. Prime/clean one end of the spacer that has been cut to fit and cement into the "T" of the key rib.

It is now time for the placement of the final rib assembly. Position and affix the final rib assembly using the steps previously described. The temporary 2-inch X 4-inch side rails can be removed (Figure 19) once all carriage bolts, washers, and nuts are in place.

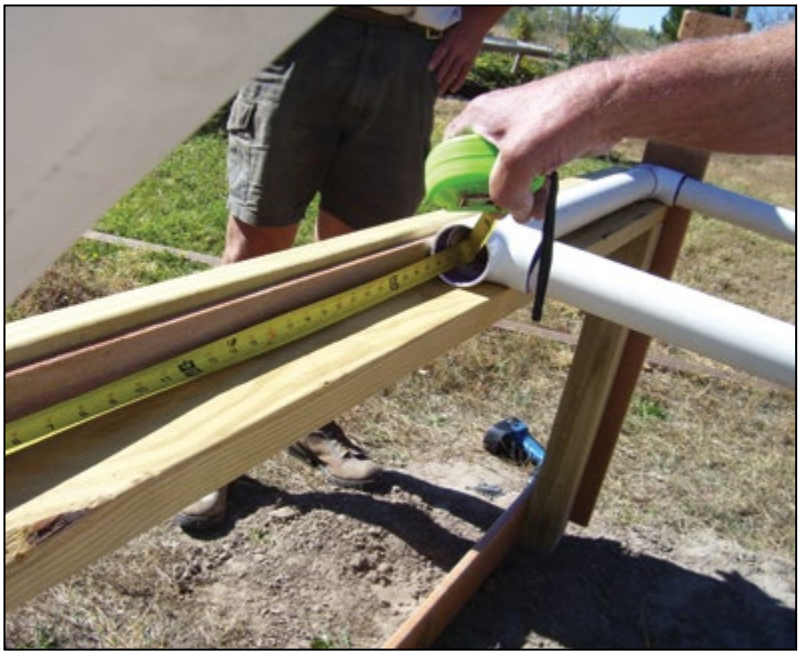

Figure 18. Measuring the distance to cut the final spacer.

Figure 19. Removing the temorary side rail.

IV. HIGH TUNNEL CONSTRUCTION – Framing

a. Base Plate or Kick Plate

The base plate is used as an attachment point at the soil surface for the poly skin material. The base plate consists of two (2) 10-ft and one (1) 12-ft (= the structure length of 32 feet) painted 1-inch X 4-inch lumber attached to the outside face of the 4-inch X 4-inch ground posts. Attach the base plate to the base posts using 2-inch screws, start at one end, position the boards of the base plate adjacent to the next (butt joint), and secure the butt joint with an 18-inch long by 1-inch X 4-inch painted scab using 1½-inch screws (Figure 20). Place the scab section on the inside of the structure. The base plates can be positioned any time after the base posts have been set. Once the base plate is attached, use a hand saw to remove the outside corner of both ends. Cut this portion of the base plate at an angle of approximately 45 degrees. Removing this corner will help reduce wear on the poly skin.

Figure 20. Scab over butt joint of base plate.

b. End-wall Framing

The desired door size dictates how the end walls are framed, but the framing is similar regardless and has several functions: provides rigidity to the structure; provides attachment points for the poly skin material; and provides access to the interior. You may choose to incorporate a door on both end walls or on a single end wall. To establish the framing, lay a tape measure across the face of an end of the structure (Figure 21). Place a marker at the center point (for this structure it is at 8 feet). Most wheelbarrows and small implements will easily fit through a 48-inch wide opening, but you can modify the door opening to fit your needs. For the purposes of this document, mea-

Figure 21. Establishing end wall layout.

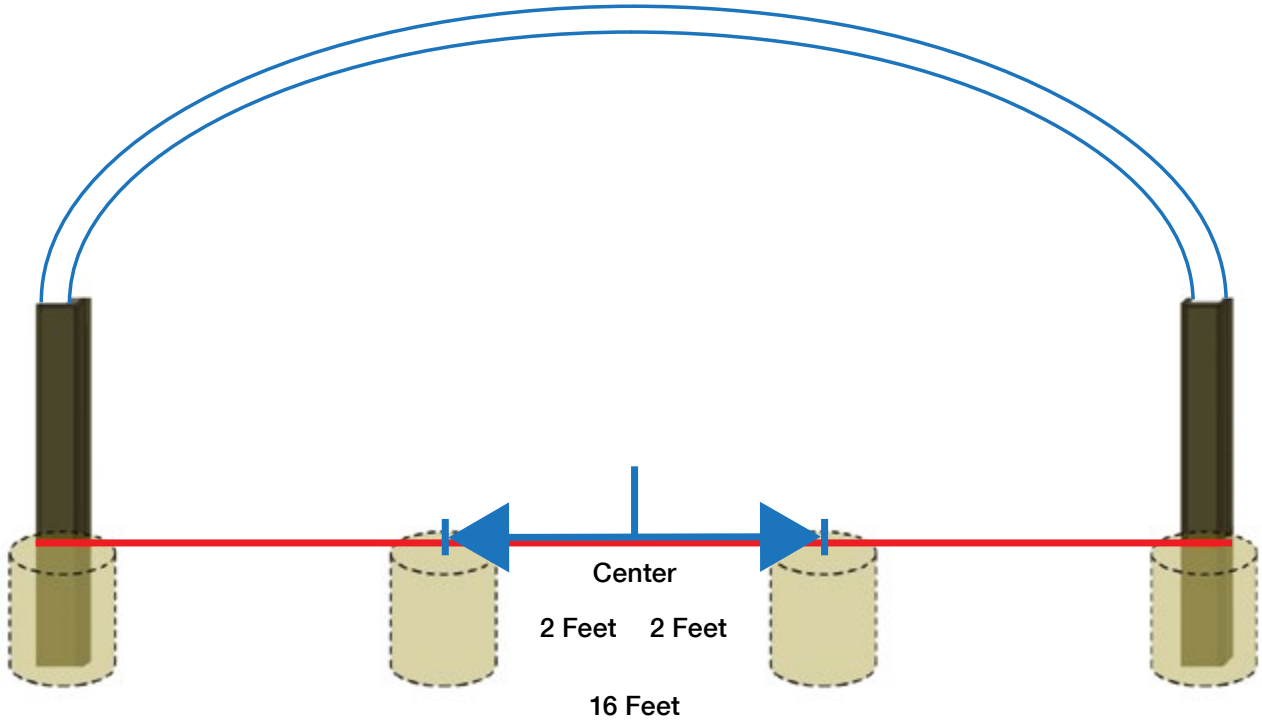

Figure 22. Location of holes for end wall door frame supports.

surements are based on a 48-inch door opening. Place markers at 2 feet on either side of center along the tape measure (example at 6 and 10-feet, respectively). At the 6- and 10-foot markers, dig a 6- to 8-inch diameter hole approximately 2 feet deep (Figure 22).

i. Door Frame

The center height of this high tunnel is between 9 and 10 feet. Select a painted 2-inch X 4-inch X 16-ft board and place vertically into the hole dug at 6 feet (Figure 23). Place the 2-inch X 4-inch post into the hole and position so the post is 2 feet out from the center marker. Turn the 2-inch X 4-inch post so that the 2-inch wide side is facing the PVC rib of the high tunnel. Push the top of the 2-inch X 4-inch post toward the PVC rib so it is just touching the PVC rib. Place a 4-foot level on the 4-inch wide side of the 2-inch X 4-inch post, adjust this side of the 2-inch X 4-inch post for plumbness. Mark the 2-inch face of the 2-inch X 4-inch post just under the PVC rib and vertically mark the PVC rib where the 2-inch X 4-inch intersects (these marks on the PVC are approximate sight markers for aligning the 2-inch X 4-inch post when positioning for attachment to the PVC rib). Remove the 2-inch X 4-inch post from the hole and cut to size on the mark either with a hand saw or chop saw (the angle on the 2-inch X 4-inch to match the arc of the PVC

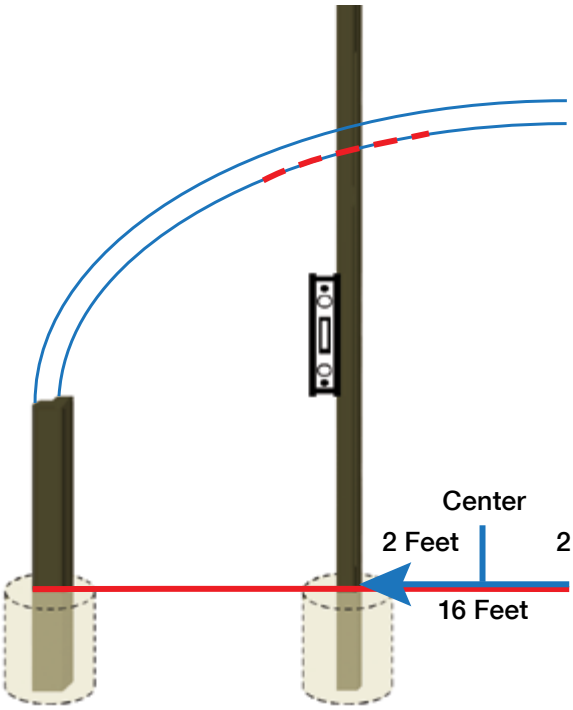

Figure 23. Placement of first post for door frame.

rib is about 22 degrees). Return the 2-inch X 4-inch post back to the hole (Figure 24), slide the cut end under the PVC rib (match the angle and align the 2-ich X 4-inch post with the vertical marks on the PVC rib), and be certain the outside face of the 2-inch X 4-inch post is flush with the outside face of the PVC rib and the structure base. Use a 3/32-inch drill bit to pre-drill two holes through the back/top of the PVC in line and angling toward the 2-inch X 4-inch post. Attach the PVC rib to the 2-inch X 4-inch post using 4-inch screws through the pre-drilled holes; tighten until snug. Do not over tighten the screws and distort the PVC pipe. Plumb the 2-inch X 4-inch post on both the 2-inch and 4-inch faces, backfill the hole with soil and fines, tamping and jiggling the post in the same manner as when setting the base posts. Be sure to keep the post vertically level and flush with the outer edge of the structure base.

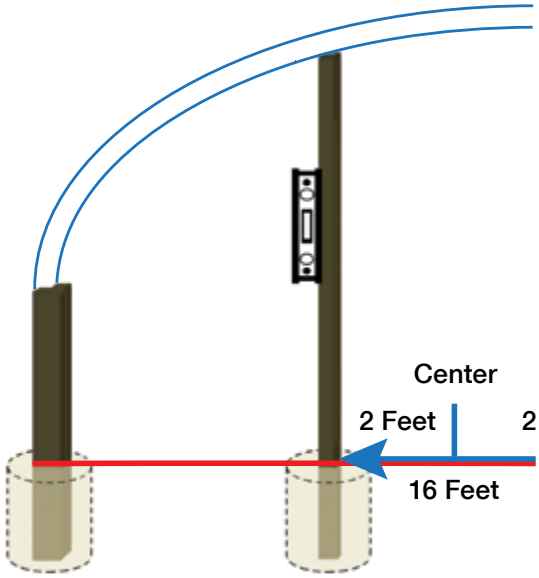

Figure 24. Placement of post one, cut to fit, vertical plumb, attached to top of hoop with 4-inch screws.

Cut a 48-inch long 2-inch X 4-inch spacer. Place this spacer on the ground between the 2-inch X 4-inch post of the door frame and the second hole (Figure 25). Use the spacer as a guide, place a second painted 2-inch X 4-inch X 16-foot post into the second hole. Repeat steps outlined above to size and set the second door post.

Once both door frame posts have been set, measure up 80-inches from the ground, mark this point on one side of the door frame, use the 48-inch spacer as the header (Figure 26) for the

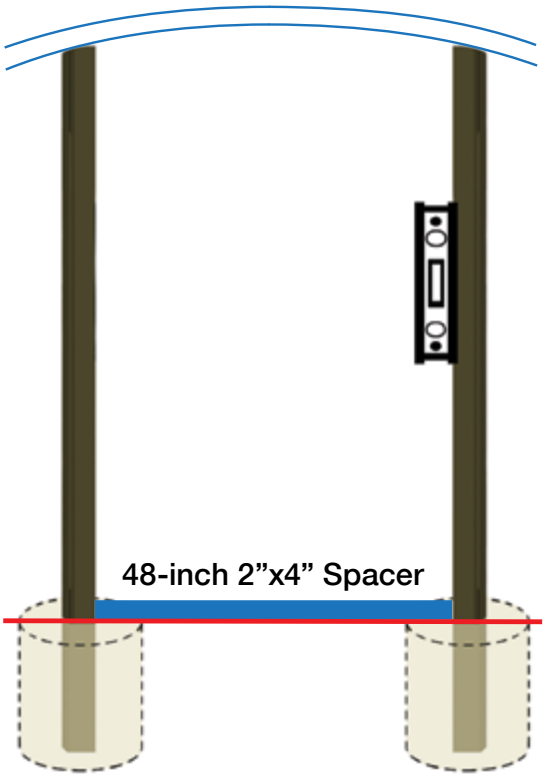

Figure 25. Placement of second post, using a 48-inch spacer.

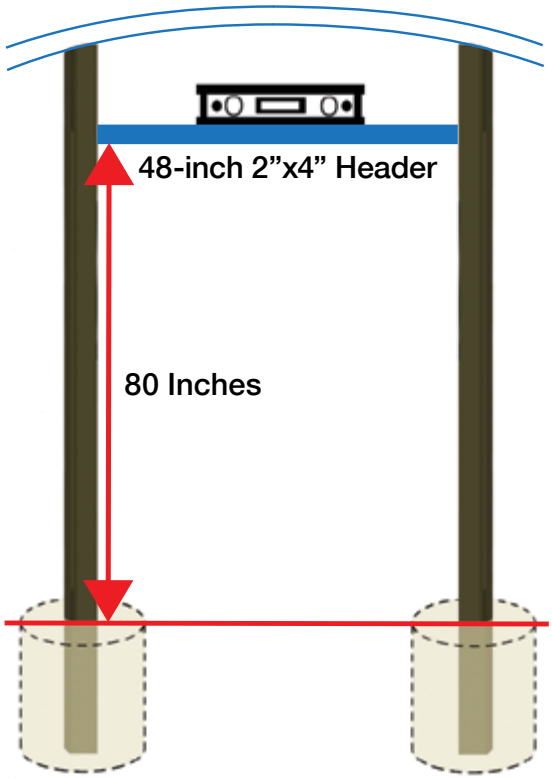

Figure 26. Placement of door header.

door frame and attach to the inside of the door frame post (the 4-inch wide face) using two 3-inch screws at the 80-inch mark (through the door frame post into the header), place a 2-foot level on the horizontal surface of the header, fit for level, and drive two 3-inch screws through the second door frame post into the 2-inch X 4-inch header board.

c. Complete the End Wall Framing

The next step is to build rectangular frames that consist of a base plate, two side rails, and a top plate that fits between the doorframe and the corner posts of the structure base. At ground level, measure the distance between the inside 4-inch X 4-inch base post and the outside of the 2-inch X 4-inch door frame post. Cut the 2-inch X 4-inch baseplate to fit this measurement. Place (do not attach) the baseplate into the measured opening at the soil surface and fit for level. Measure the distance from the top of the 4-inch X 4-inch base post (just under the base top rail (Figure 27) to the top of the baseplate, and cut two (2) 2-inch X 4-inch pieces (side rails) to match this measurement. Remove the baseplate and attach the side rails to the base plate with two 3-inch screws per side rail. Attach the side rails by driving the screws through what will be the bottom (soil side) of the baseplate (avoid "toe nailing"). Slide this "U" shaped assembly back into position between the 4-inch X 4-inch base post and the doorframe. Fit the baseplate level so the side rail is just under the base top rail. Attach the side rails to the 4-inch X 4-inch corner post and the doorframe with 3-inch screws. Measure and cut to fit the top plate and attach to the structure using 3-inch screws. Drive the screws through the top plate into the side rails. Follow these steps and build another rectangular frame to fit the other side of the door frame to complete the end framing (Figure 28).

Repeat all steps as outlined above and complete the frame on the opposite end of the structure.

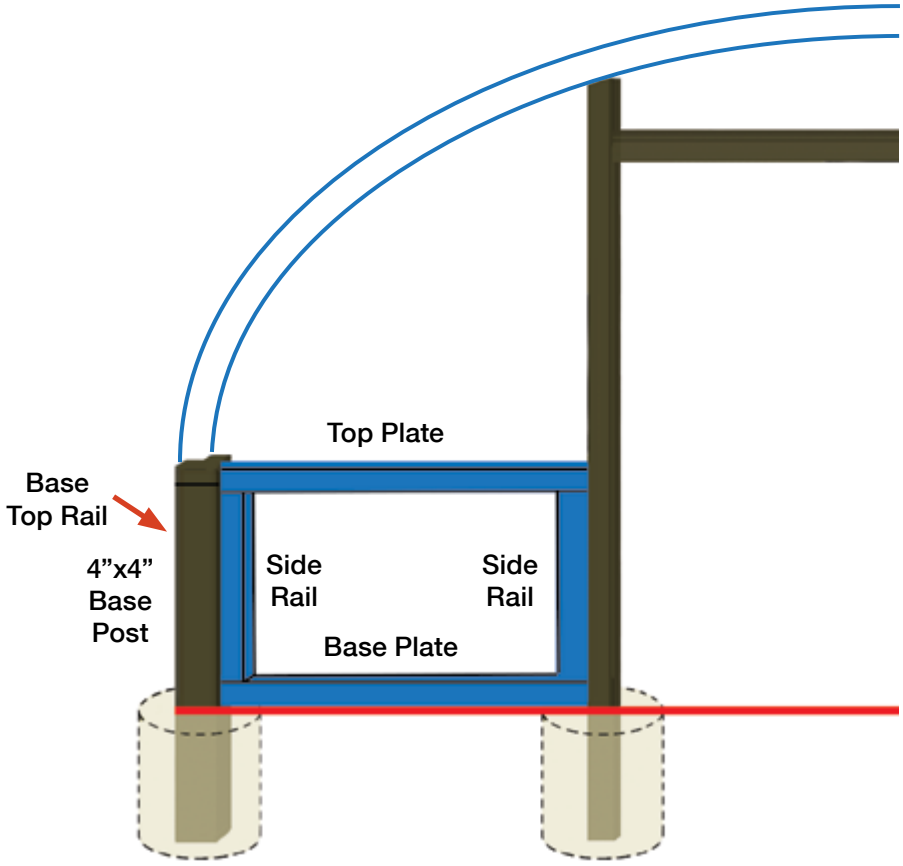

Figure 27. Finish framing the end walls.

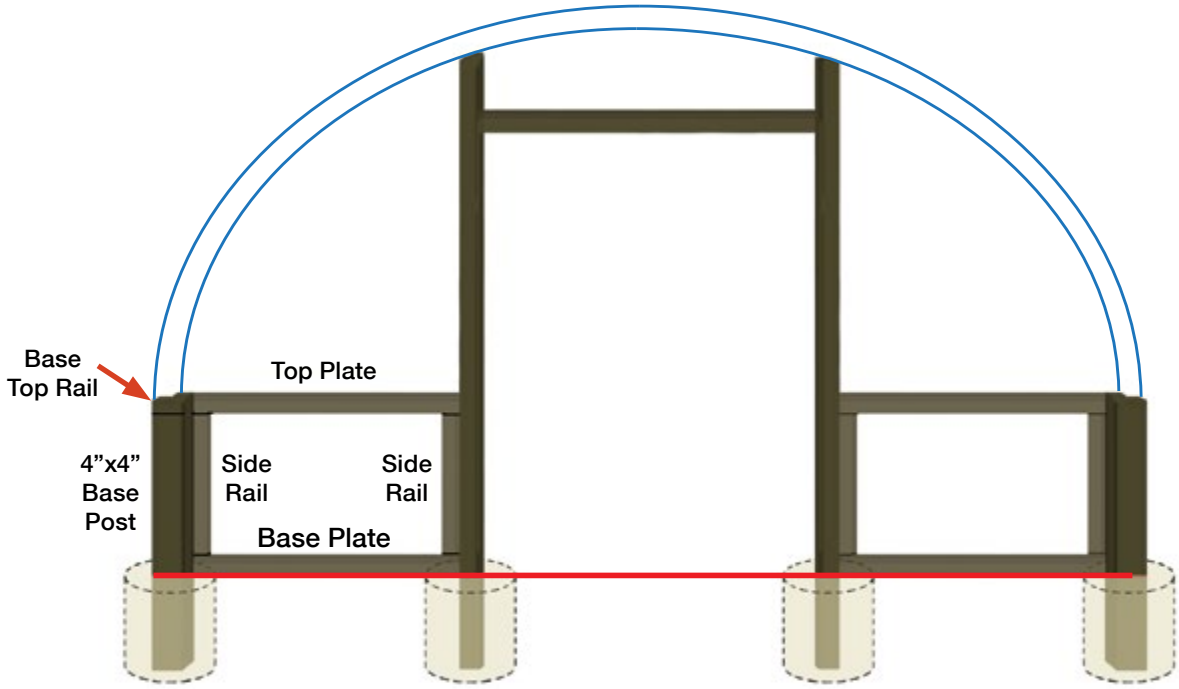

Figure 28. End wall assembly.

d. Attaching the Purlins

A purlin is a horizontal beam along the length of a roof, resting on a main rafter (rib) and supporting the common rafters (ribs). There are two types of purlins used in these structures: a) structural purlins and b) irrigation purlins. For this project, structural purlins are painted 1-inch X 4-inch lumber. They are attached to the outside of the structure, add rigidity, and provide a stop point for the roll-up sides (note: if you are not incorporating roll-up sides in your structure, you do not need the 1-inch X 4-inch structural purlins). The irrigation purlins (¾-inch schedule 40 PVC) are attached to the inside of the structure, provide some structural rigidity, and allow for different irrigation configurations.

Figure 29. Structural (wooden) and irrigation purlins.

Purlin String Lines

Working on one end of the high tunnel, stretch a tape measure from the wooden base along the outside arc of the end 2-inch PVC rib and mark the PVC rib at 5 and 10 feet. Repeat this and mark the same distances from the opposite side of the same end PVC rib. Repeat these measurements and mark their locations on the outside rib on the opposite end of the high tunnel. Run a taut string line (as indicated by red dash in Figure 30), on the outside, from one end of the structure to the other at each of these three marks on

Figure 30. Red dashes indicate location of string lines for purlin locations.

the ribs (5 feet on either side and the 10 foot center mark – a total of three string lines across the outside of the structure).

Structural Purlin Placement

The 1-inch X 4-inch purlins need to be configured in a manner so that when the ends of the 1-inch X 4-inch purlins are butted together-the butt joint scabs do not interfere with the ribs – the purlins must lay flat on the ribs. Since this structure is 32-feet long and the ribs are on 4-foot centers, the best way to accomplish this is to use a 10-ft + 12-ft + 10-ft configuration (Figure 31). Working along the outside of the base, lay out linearly and butt together a 10-foot, then a 12-foot, and finally a 10-foot 1-inch X 4-inch. Place a 16-inch long section of 1-inch X 4-inch (scab) underneath the butt joint so that the length of the scab is divided in half under each of the 1-inch X 4-inch purlins. Keeping the butt joint aligned and purlin and scab straight, attach the purlins to the scab with ten (10) 1½-inch screws (five per either side of the joint per 1-inch X 4-inch board). Pre-drill the screw holes to prevent splitting and weakening the joints. Be certain to drive the screws through the purlins into the scab (the screws may catch and tear the poly skin material if the screws are driven from the inside-out through the scab into the purlins). Repeat scab attachment for the second butt joint. Pick up the entire purlin from the ground and rest the 1-inch face on top of the PVC "T" at the base of each rib (so that the scabs are on the inside of the structure). The 4-inch face will be resting on each of the ribs (Figure 32). Check alignment, ensure that scabs and ribs do not contact each other, and adjust so one end of the purlin is in alignment with one of the end PVC ribs, the 1-inch X 4-inch purlins may overlap the opposite end PVC rib but will be cut off later. Mark the center point of each rib on the

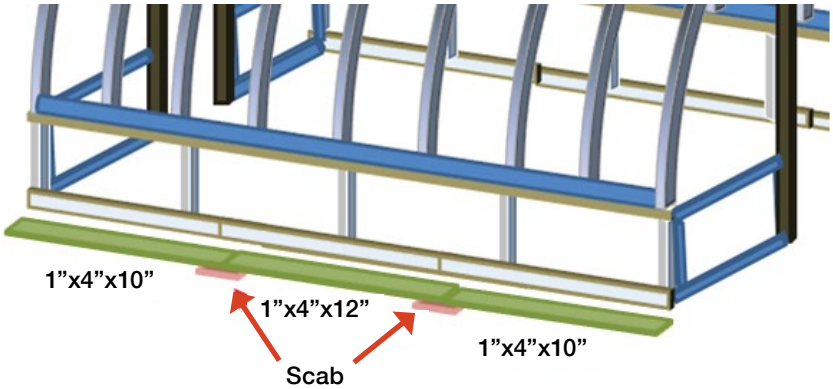

Figure 31. Purlin configuration with scab locations to avoid ribs.

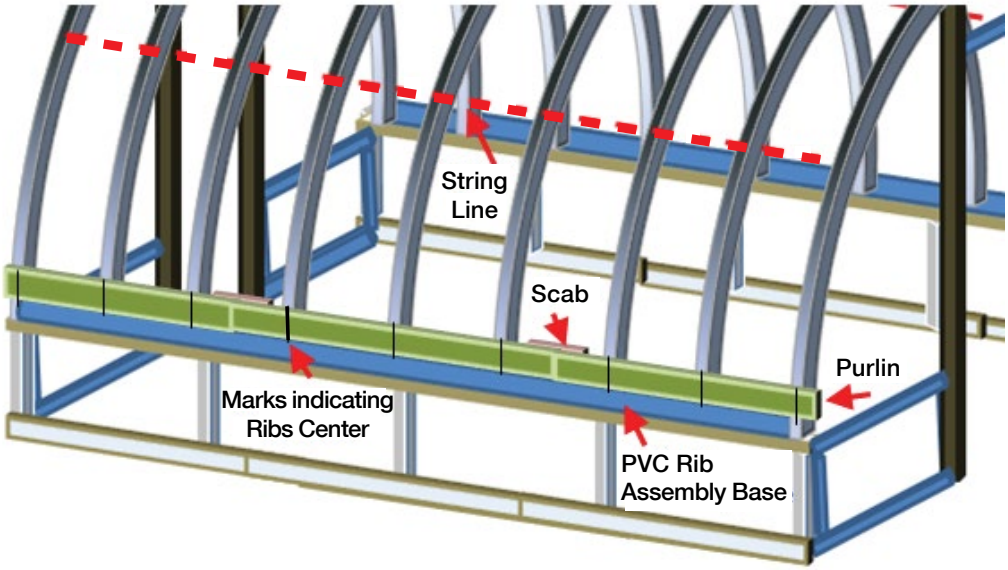

Figure 32. Placement of purlin and marking location of ribs.

outside 4-inch face of the purlin with a pencil or marker. Lift the entire 32-foot purlin and hold the top 1-inch side of the purlin in-line with the string line at the 5-foot mark (Figure 33). Working from the center of the structure out, align the mark on the purlin with the corresponding PVC rib and attach the purlin to the rib using two (2) 1½-inch screws. Drive the screws through the purlin into the PVC. Tighten so the purlin lays flush with the PVC rib and that the head of the screw is flush with the outside edge of the 1-inch X 4-inch purlin. **ATTENTION: Do not overtighten and strip the screw from the PVC rib.** Work out from the center, monitor alignment of ribs with the marks on the purlin, the top edge of the purlin with the string line, and repeat the attachment steps on each rib until the purlin is held in place with two screws at each rib. You may need to move the rib to lineup with the mark on the purlin. **ATTENTION: Do not attach the purlin to either of the end ribs until the irrigation purlins have been attached and the string lines have been removed.** Build the second structural purlin and attach to the opposite side using the above instructions. Once the irrigation purlins have been attached and the string lines removed, use a hand saw to trim both ends of the purlin at a 45-degree angle so the leading edge (closest to the rib) is flush with the face of the outside purlin.

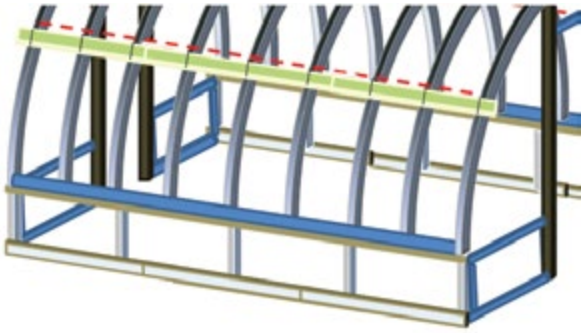

Figure 33. Final location of purlin ready for attachment to ribs.

Irrigation Purlins

Identify at what point the water source will enter the high tunnel. Establishing a frost-proof hydrant on the inside of the structure (prior to building the high tunnel) is best. This will allow for watering in freezing weather without the need to haul or store water inside the high tunnel. There are three irrigation purlins in this structure (Figure 34). All can be pre-built to fit at the same time and each consists of a 32-foot run of schedule 40 ¾-inch PVC, a ¾-inch valve, three ¾-inch slip by threaded "T"s, and two ¾-inch end caps. Lay out the PVC pipe inside the high tunnel, divide the distance by thirds and place "T"s at these unions. The "T"s on the side irrigation purlins will allow for connections to water raised beds. The "T"s in the top center purlin will allow for overhead sprinkler irrigation. Clean all PVC unions and cement the unions together, including the end caps on the end of the purlin away from the water source. Once the cement is set, the purlins can be attached to the high tunnel. Attach the ¾-inch PVC purlin to the high tunnel ribs by holding a ¾-inch EMT (metal) 2-hole conduit strap on the inside of each rib even with the string line. Pre-drill both screw holes for the conduit strap with a 3/32-inch drill bit. Start in the middle of the structure, place the EMT strap around the purlin, and attach the strap to the rib using a 1-inch screw. At this point loosely tighten the EMT straps so adjustments can be made. Continue attaching the EMT straps to the ribs and work toward the ends. Adjust the purlin ends so they are even with the outside edge of the end ribs. Repeat this process for the opposite side and the top center purlins. Plumb the three purlins together and connect to the water source. Once in place, tighten all screws so the purlin is held tight but do not overtighten and strip the screw from the PVC rib.

Figure 34. Irrigation purlins.

Door Construction

Measure the height of the doorframe by placing the tip of the tape measure at the soil surface near one of the 2-inch X 4-inch door frame posts and measure up to the header board. Cut two vertical door braces from 2-inch X 4-inch lumber at 1-inch less than the measured height. This will allow for a ½-inch space between the soil and the kick plate of the door and ½-inch space between the top of the door and the header board. Set these two boards on a flat surface and prepare the horizontal door brace. Measure the distance between the 2-inch X 4-inch vertical posts of the high tunnel doorframe at the point just below the header board and at the point just above the soil surface. These measurements should be the same if the door frame is square. Cut three horizontal brace sections out of 2-inch X 4-inch painted lumber at 4 inches shorter than the measured length (Figure 35). Subtracting 4 inches from the overall length of the horizontal braces will leave room for the vertical door braces and allow for a ½-inch gap on either side of the door when installed. The gap is important so the door will swing freely when in use. Place the horizontal braces with the vertical braces and prepare the door corner supports. The door corner supports can be made from scrap 2-inch X 4-inch lumber found around the project sight. Make them approximately 16 inches in length. Use a miter saw to cut both ends of the corner supports at 45-degree angles so the biased side of the cut is on the same side of the 2-inch X 4-inch brace (Figure 36). Place all the door pieces on a flat surface and attach the vertical braces to the end horizontal braces using 3-inch screws. Attach the third horizontal brace to either side of the vertical braces at their center using 3-inch screws. Next, square the door frame by measuring the distance from opposite corners – both directions. Adjust the door so that both measurements (from opposite corners) are equal. Attach the corner supports in place with 3-inch screws driven from the outside of the door into the corner supports. Attach a 3-inch door hinge using 1½-inch screws to the 4-inch face of the vertical brace of the door about 16 inches from the top and a second hinge on the same face of the vertical brace about 16 inches from the bottom (Figure 37). Dry fit the door into the door opening, adjust and shim so the door is square with approximately ½-inch gap all the way around, open the door, and attach the other half of the hinge to the 4-inch face of the door frame post. Repeat the entire door building process for the opposite end.

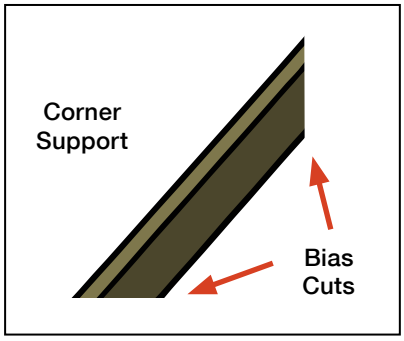

Figure 36. Door corner supports.

Figure 37. Door Assembly.

Poly Skin Attachment to the Wooden Base

At this point, all framing for the high tunnel is complete. It is now time to begin attaching the poly skin covering to the structure. In Wyoming's climate, roll-up sides are required for ventilation of excess heat during the summer. Roll-up sides cause an issue in that they prevent burial of the poly skin material eliminating secure soil contact, which can allow the structure to be blown away in Wyoming wind. Creating a rigid poly skin wall at the base of the structure allows the roll-up sides to begin higher and accomplishes several goals: a) permits adequate air flow for cooling and humidity reduction; b) protects young, tender plants from direct cool or cold early spring breezes when ventilation is required; c) allows the poly skin material to be buried on all four sides, assisting in securing the structure to the ground.

Begin the attachment process by unrolling one of the 4-foot wide poly skin sections to the point you can find a leading edge (if the weather is a bit breezy, it is better to retain control of the plastic than to allow it to flap in the wind). On the outside of the structure, align the 4-foot wide leading edge with the lower half of a doorway frame post (either door, either end, either side of the door), at the same time, align the top edge of the skin with the "top plate" of the end wall framing, and check to see that approximately 1-foot of the skin material is laying on the ground. Measure and cut to fit lath/furring material for the door side "side rail" and the end wall framing "top plate." Attach the vertical leading edge of the poly skin material in place using 1-inch screws through pre-drilled holes in the lath through the poly skin into the end wall frame side rail. Align the poly skin material with the top plate, pull poly material taut (toward the corner…away from the side rail) and continue attachment. Repeat attachment procedures to the "base plate," while keeping the skin material taut and work toward the corner. Repeat attachment procedure at the corner post. Using a knife or pair of scissors remove a "V" of skin material from the base of the corner post (so that the point of the "V" is at the outside corner of the base). Cutting the "V" from the post corner through to the bottom edge of the poly material will prevent the material from bunching around the corner.

Continue attachment around the corner to the side of the structure. On the outside of the top rail, attach the poly material using the wiggle wire channel, flat side toward the structure, instead of using the lath. The channel may need to be pre-drilled so that a 1½-inch long screw goes easily through the channel. Attach the channel as contiguous pieces across the side of the top plate, pulling the skin material taut as you work your way along the structure. Pull the skin taut and attach the material to the bottom plate along the side with lath and at each vertical post in the side. Work your way to the corner, cut the corner "V" from the material, continue on and repeat the procedures for attachment on the end frame (as described earlier) until all sides of the skin material are secured to the structure. Repeat this entire process for the opposite outside of the structure.

Installation of the Poly Skin Cover

Welcome to the most intimidating portion of the construction process. Manufacture's installation instructions may differ slightly depending upon the supplier selected for your poly skin material; be certain to follow the manufacturer's installation instructions if provided with the poly skin.

Preparation

Eliminate any opportunity for punctures prior to unpacking the poly skin. Unpack the poly skin material and lay flat on the soil surface near the high tunnel structure approximately one hour prior to attachment. This allows the poly skin to warm slightly, removes some of the wrinkles, and the poly skin material will become more pliable and easier to install.

Placement

Orient the poly skin so that it can be easily pulled on top of the structure. Lifting the leading edge, pull the poly skin material over the top of the structure. Center the material on the structure so that the material covering the end walls overlaps the top rail of the base by a minimum of 6 inches at the peak center height. Center the material so an equal amount of material overlaps the top rails on the outside of both sides. Some manufacturers incorporate colored strips to assist with plastic alignment with the structure.

Attachment

Once the poly skin is in the proper location, select a piece of lath material and mark the center, place the lath on top center of the end rib over the polyskin. Use two people to pull the material away and down from center (in alignment with the rib). Attach the lath to the PVC rib using 1-inch screws. Place the first 1-inch screw in the center of the lath and place additional screws on either side at about 12-inch intervals away from the center (pre-drilling the lath will reduce splitting). Do not overtighten screws and strip from the PVC rib. Continue lath attachment in this manner only to the point where the doorframe posts attach to the end rib-then stop. Pull the overhanging end poly skin material straight down to the ground on both sides, grab the leading edge, and pull the material out from the center. Cut to fit lath for both doorframe posts. Attach a lath strip to one of the doorposts over the poly skin and repeat for the second doorpost. Keep the poly skin taut by continuing to pull the poly skin down and out while attaching the lath. Attach lath to the door header board and to the top half of the frame of the door. Begin poly skin attachment at the opposite end of the structure. Pull the poly skin toward you-and away from the previously attached end. Longevity of the poly skin material will be increased if you can keep the poly skin taut while attaching to the structure. Keep the poly skin centered on the structure and repeat the above attachment procedure on the second end of the structure (top PVC rib center to doorframe posts, doorframe posts, door header, and top half of doorframe). Once both ends are secure, check again that the sides are even and temporarily place wiggle wire springs into the channel on both sides to assist with holding the plastic in place (Figure 38). Use lath furring strips to hold the skin in place on all wooden surfaces of both ends – keep the material taut by pulling whichever direction needed while attaching the lath.

http://tinyurl.com/HTwigglewire

Figure 38. Holding the poly skin in the wiggle wire channel with wiggle wire.

At this point, attach the poly skin to the rest of the end rib with lath to approximately 1 inch from the top of the wooden purlin that is the "stop" for the roll-up side. Use lath and 1-inch screws to attach the poly skin to the entire length of the purlin along the first side of the structure that is the "stop" for the roll-up side (leave a 1½-inch space from the end of the purlin). It is helpful to have a person on both ends pulling the poly skin taut across the face of the purlin during attachment. Repeat attachment to the purlin on the opposite side in a similar manner; however, in addition to pulling the material taut across the face of the purlin, also pull the material straight down while attaching the poly skin to the purlin with lath. This will hold the material as taut as possible – this is important to reduce wear on the poly skin.

The poly skin is secure except for the roll-up side opening on the end ribs. To complete attachment, measure the distance from the top of the 2-inch x 4-inch wooden base up to the bottom of the 1-inch x 4-inch wooden purlin, cut a portion of the wiggle wire channel (WWC) that will fit in this space (repeat for all four corners). Fit the WWC so there is approximately a 1-inch gap between the WWC and the wooden purlin (roll-up stop purlin) and does not hang over the curve of the PVC pipe at the bottom of the rib. Pre-drill the WWC (as with previous attachment instructions), pull the excess poly skin material toward the roll-up opening (away from the end) so only one layer of poly is present and that it creates a smooth finish to the end wall. Lay the WWC over the top of the poly skin and attach the WWC to the 2-inch PVC rib using 1-inch screws-do not overtighten. The excess poly remaining when held out to its greatest point resembles a "dog ear" on the structure.

Finish attachment of the dog ear by pulling the excess material away from the end over the top of the rib/purlin toward the rest of the structure. Attach this material to the rib with another piece of lath. Begin attachment of dog ear on top of the 1-inch x 4-inch purlin using 1½-inch screws. Pull the poly skin tight (toward the opposite end) working up the rib and attach the remaining lath over the dog ear with 1½-inch screws – work up the rib until the lath exceeds the edge of the dog ear. Finish all corners in this manner.

Cut the Poly Skin to Fit

One cut is made the length of the WWC on the inside of the end rib. Pull the poly skin material toward the end and cut the roll-up side flap at approximately 4 inches away from the end purlin. This excess material needs to remain on the roll-up side as the skin will contract in cold weather. Not allowing excess material for poly skin contraction will reduce your ability to lock (with wiggle wire) the roll-up side down for the winter. The excess material of the dog ear can be trimmed to fit the length of the rib. Repeat this step for all four corners. Excess material can be cut to fit and tucked under lath to help with attachment.

The top and swing side of the doors can be cut out from the poly skin using a straight blade placed in the gap between the doorframe posts and the doorframe. Cut the material on the doorframe post edge, the header, and away from the material at the base. Leave the hinge side uncut as this will reduce unwanted air flow into the structure. You may need to cut out the material covering the hinges as this can become a bind point.

Roll-up Sides

Prime/clean and glue two 20-foot sections of 2-inch PVC pipe together on either side of the high tunnel (HT). Cut the 40-foot section to 33 feet (or 1- foot longer than the structure – remove "bell" end if present). Pick up this section of pipe and cradle the PVC in the poly skin material down the entire length of the structure that will be used for the roll-up side. Using the WWC as a guide, select a distance from the WWC that will allow the poly skin to wrap around the PVC pipe – continue to hold the pipe cradled in the poly skin material. Attach the poly skin material to the PVC pipe using lath and 1-inch screws. Check that the distance remains consistent between the PVC pipe and the WWC attached to the HT frame – this will aide in a clean finish and consistent action of the roll-up side. Attach lath over the poly skin to the pipe the entire length of the

PVC pipe (Figure 39). Repeat this for the opposite side of the structure.

To create handles for the roll-up side, cut two 6-inch and two 12-inch sections of PVC pipe from one of the remaining 7-foot sections of the 2-inch PVC pipe. Clean and cement together one 12-inch section, one 90-degree section, one 6-inch section, and an end cap on the 6-inch section. This will act as the handle. Clean and cement a remaining 90-degree elbow to the 12-inch section and glue the entire assembly to one end of the PVC pipe that has been attached to the poly skin material for the roll-up side. Allow the glue to set. Attach an end cap to the opposite open end of the roll-up PVC pipe. End caps will eliminate wasps from nesting in the roll-up sides. Repeat the above steps to complete the roll-up on the opposite side.

Roll up the side using the handle. The batten tape will help secure the roll-up side in place; however, it can be held securely in place by driving a ½-inch rebar "J" hook into the ground near the door. Attach a ¼-inch piece of rope to the "J" hook, roll up the side, and tie a loop in the rope so it will slip around the handle of the roll-up side.

Figure 39. Attaching lath strips to rollup side handle.

Batten Tape

Count the number of intra-rib spaces on your structure, multiply times 2, and cut remaining scrap pieces of lath into 8-inch sections to equal the total number calculated (=batten tape anchors [BTA]). Pre-drill a 3/32-inch hole into the BTAs 1-inch from either end. Wrap the leading end of the batten tape around the center of a BTA (at least five times, with no wrinkles), lay the BTA and batten tape on the kick plate of the base of the structure-at approximately the middle between the two ribs of one end. Attach the BTA using three, 1½-inch screws, one through either end and one through the middle of the lath and batten tape. Unroll approximately 15 feet of the batten tape and then throw the entire roll over the top of the structure to the other side (Figure 40). Work the batten tape so it lays flat on the skin between the ribs, cut the batten tape approximately 1-foot longer than the opposite side anchor point, wrap this end around the next BTA so that the BTA is even with the anchor point (kick or base plate), grab the batten tape and pull tight, take at least four more wraps around the BTA, hold in place and attach the BTA in the same manner as the first side to the kick plate with three 1½-inch screws. Repeat the steps outlined above at each intra-rib space along the structure.

Figure 40. Throwing batten tape over structure for attachment between ribs.

Bury Excess Poly Skin Material

There should be approximately 1 foot of material on the ground. Dig a trench around the structure and bury the excess material in the trench. Burying the excess will assist in holding the structure to the ground.

Now go grow!

Literature Cited

Anonymous. (1999). *What is it? pythagorean theorem*. Retrieved from www.eduplace.com/math/mathsteps/7/c/index.html.

Ashton, Jeff. 1994. "A short tale of the long history of season extension". *The Natural Farmer*. Spring. p. 12–13.

Bachmann, Janet. 2005. *Season Extension Techniques for Market Gardeners.* Revised. ATTRA publication. 28 p.

Jimenez, Del, R. Walser, R. Torres. 2005. *Hoop House Construction for New Mexico: 12-ft. x 40-ft. Hoop House*. New Mexico State University-Cooperative Extension Service. Circular 606. 9 p.

Walker, S., Uchanski, M. E., & Jimenez, D. (2012). *Hoop house vegetable production*. New Mexico State University. Extension Guide H-252. Retrieved from http://aces.nmsu.edu/pubs/_h/H-252.pdf

Appendix

I. Suggested Tools List

Battery-powered drill(s)	(2) 50-ft tape measure(s)	Tamping bar
Ladder	(2) String Lines	Shovel
Table saw	Line level(s)	Markers
Chop saw	Strap-on post levels	Paint pans
Saw horses	25-ft tape measure	Paint rollers
Posthole digger	3/32-inch drill bits	Duct tape
(2) 4-ft level(s)	Screw driving bits	50-ft poly rope
2-ft level	Hand saw	*Generator

*depending on availability of electricity at build site.

II. Materials List for Hard-Sided High Tunnel (HSHT)

Item	Qty	Description	Use
1	**21**	2-in x 20-ft SCH 40 PVC Pipe	(17) ribs and rib assembly and (4) roll-up sides
2	**18**	2-in SCH 40 "T"s	ribs and rib assembly
3	**8**	2-in SCH 40 "90"s	(4) rib assemblies and (4) roll-up sides
4	**4**	2-in SCH 40 End Caps	roll-up sides
5	**21**	1-in x 4-in x 10-ft (#2 pine lumber)	(14) purlins, (6) door stops, scabs
6	**7**	1-in x 4-in x 12-ft (#2 pine lumber)	purlins
7	**7**	2-in x 4-in x 8-ft pine lumber	doors
8	**20**	2-in x 4-in x 10-ft pine lumber	(10) frame end walls and (10) ripped to 3/8-inch furring strips
9	**8**	2-in x 4-in x 16-ft pine lumber	top of wooden base and door frames
10	**5**	4-in x 4-in x 10-ft pine posts	wooden base
11	**5**	¾-in x 20-ft SCH 40 PVC Pipe (100 feet total)	irrigation system
12	**27**	¾-in 2-hole EMT straps	
13	**9**	SCH 40 PVC "T" ¾-inch Slip X ½-inch threaded	
14	**9**	½-inch X ½-inch threaded nipple	
15	**3**	PVC Spray Nozzles 360° (adjustable) to fit ½-inch threaded nipple	
16	**3**	¾-inch SCH 40 PVC "T" (slip)	
17	**4**	¾-inch PVC ball valve (slip)	
18	**1**	¾-inch SCH 40 PVC hose connector	
19	**3**	¾-inch SCH 40 PVC end cap	
20	**1**	Qt. PVC primer	PVC assembly
21	**1**	Qt. PVC glue	
22	**8**	Lb. 1-in TORX head deck screws	attachment of lath
23	**5**	Lb. 3-in TORX head deck screws	attachment of frame and purlins
24	**1/2**	Lb. 4-in TORX head deck screws	attachment of door frames
25	**32**	¼-inch X 5-inch carriage bolts	attachment of rib assembly to wooden base
26	**32**	Nuts for ¼-inch carriage bolts	
27	**64**	¼-inch washers for carriage bolts	
28	**4**	3-inch metal pinned hinges	doors
29	**2**	3-inch hook and eye latch	
30	**2**	Gallons paint	wood
31	**1**	1 @ 24-feet X 50-feet (6-mil)	woven polyethylene cover (usually not available locally)
32	**2**	2 @ 4-feet X 50-feet (6-mil)	
33	**88**	Feet of wiggle wire spring	lockdown roll-up side for winter production (usually not available locally)
34	**88**	Feet of wiggle channel	

rev. spring 2013

III. Suppliers (listing is neither exclusive nor extensive)

Woven Poly Skin Material

J&M Industries, Inc.
300 Ponchatoula Parkway
Ponchatoula, LA 70454
985-386-6000
www.jm-ind.com

Peaceful Valley Farm Supply, Inc.
PO Box 2209
125 Clydesdale Court
Grass Valley, CA 95945
(888) 784-1722
www.groworganic.com/growing-supplies/greenhouses.html

Woven Poly Skin Material and Wiggle Wire

Northern Greenhouse Sales
Box 42
Neche, ND 58265
1-204-327-5540
www.northerngreenhouse.com/products/polys/wovenpolys.htm

FarmTek
1440 Field of Dreams Way
Dyersville, IA 52040
1.800.327.6835
www.farmtek.com/farm/supplies/home

Mention of a particular supplier is not intended as company promotion or product endorsement.

Putting it all together: The 3 Minute High Tunnel Build

Watch the video and see how it is done!

http://tinyurl.com/htconstruction

UNIVERSITY OF WYOMING EXTENSION

Issued in furtherance of extension work, acts of May 8 and June 30, 1914, in cooperation with the U.S. Department of Agriculture. Glen Whipple, director, University of Wyoming Extension, University of Wyoming, Laramie, Wyoming 82071.

The University of Wyoming is an affirmative action/equal opportunity employer and institution and does not discriminate on the basis of race, color, religion, sex, national origin, disability, age, veteran status, sexual orientation, or political belief in any aspect of employment or services. The institution's educational programs, activities, and services offered to students and/or employees are administered on a nondiscriminatory basis subject to the provisions of all civil rights laws and statutes. Evidence of practices that are not consistent with this policy should be reported to the Employment Practices Office at (307) 766-6721.

Trade or brand names used in this publication are used only for the purpose of educational information. The information given herein is supplied with the understanding that no discrimination is intended, and no endorsement information of products by the University of Wyoming Extension is implied. Nor does it imply approval of products to the exclusion of others, which may also be suitable.